IF IN DOUBT ASK

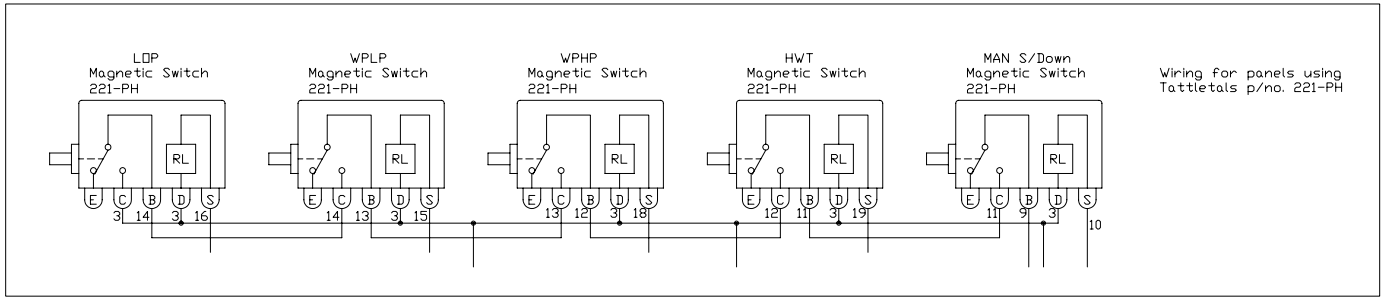

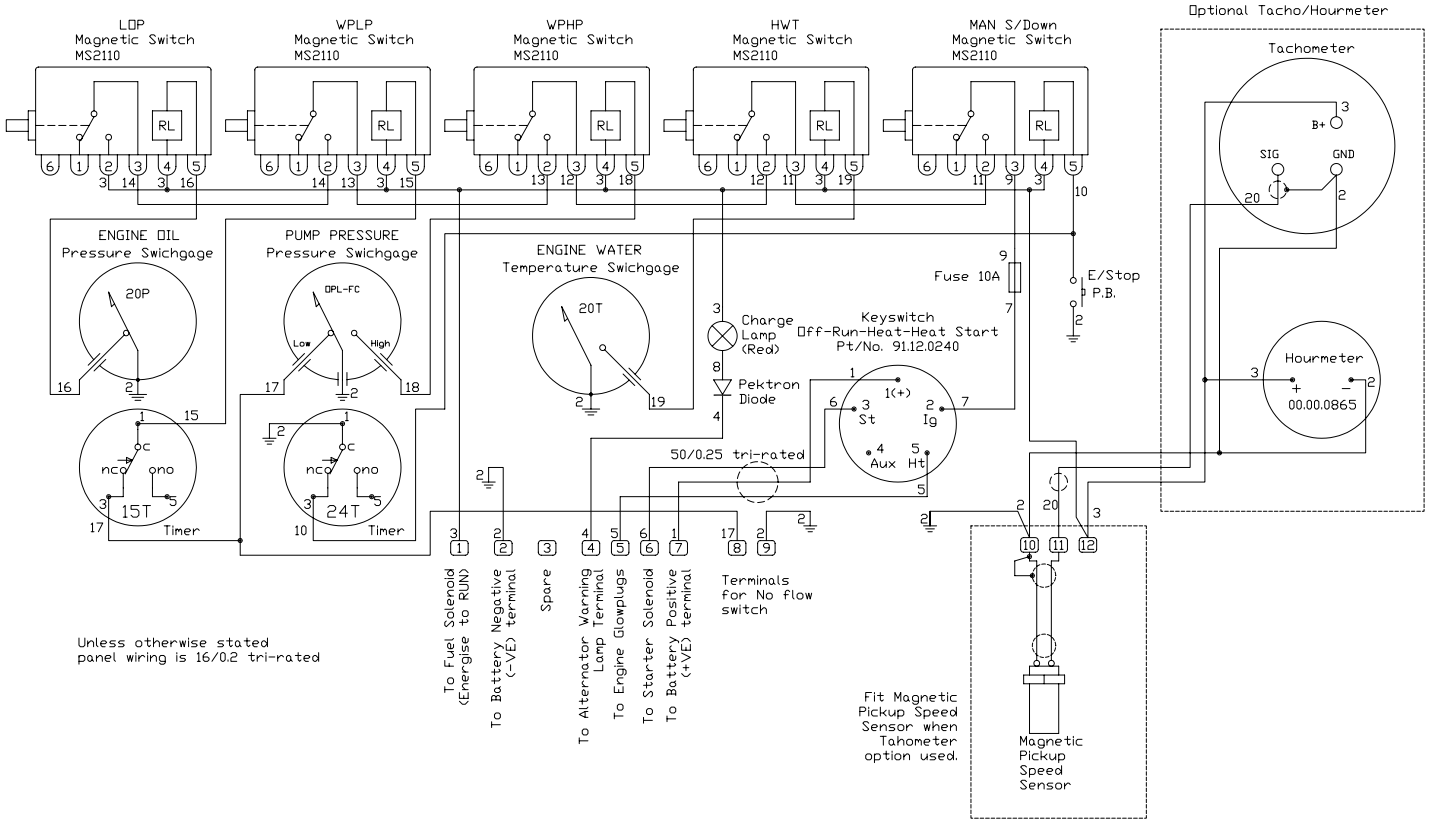

Unless otherwise stated
panel wiring is 16/0.2 tri-rated

FRANK W Murphy LTD
SWICHGAGE HOUSE
CHURCH ROAD, LAVERSTOCK
SALISBURY, ENGLAND SP1 1QZ
TELEPHONE 01722 410055
FAX 01722 410088
TELEX 477088

REV	REVISION DETAILS	DATE	NAME
A	Change to MS2110	19/8/03	GR

Customer
Murphy works order number

MAT.	n/
FINISH	n/a
SCALE	n/a
DRAWN	M. Lough
DATE	28/07/97

TITLE
38-400-689
Circuit Diagram

DRAWING No
AE2884